EXPERIMENT:3

AIM: Implement Half Subtractor and Full Subtractor using logic gate ICs.

Tools: Logisim 2.7.1 (Open Source)

Theory:

Combinational Circuit: A combinational circuit is a type of electronic circuit where the output depends only on the current inputs, not on past inputs or states.

Half Subtractor: Half subtractor is a combination circuit with two inputs and two outputs that are different and borrow. It produces the difference between the two binary bits at the input and also produces an output.

Truth Table:

Inputs		Outputs	
A	B	Diff	Borrow
0	0	0	0
0	1	1	1
1	0	1	0
1	1	0	0

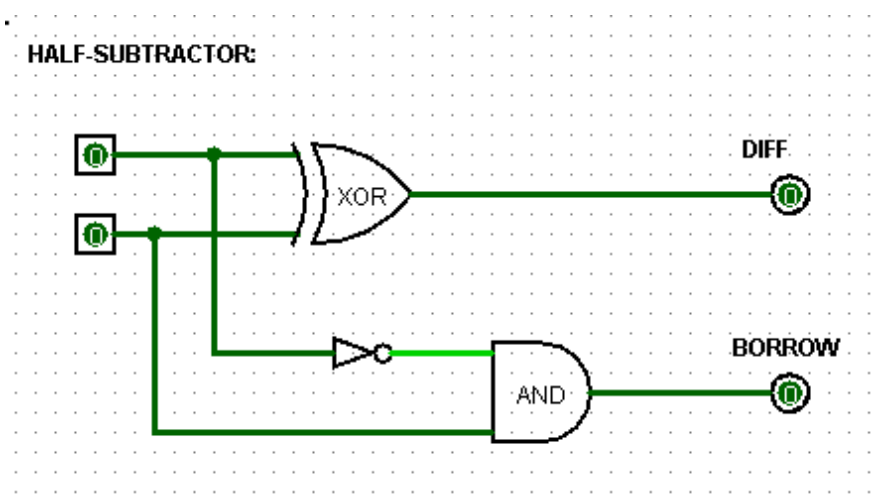

Full-Subtractor: A full subtractor is a digital circuit that subtracts three single-digit binary numbers and produces two output bits. It consists of XOR, AND and OR gates.

Truth-Table:

Inputs			Outputs	
A	B	$Borrow_{in}$	Diff	Borrow
0	0	0	0	0
0	0	1	1	1
0	1	0	1	1
0	1	1	0	1
1	0	0	1	0
1	0	1	0	0
1	1	0	0	0
1	1	1	1	1

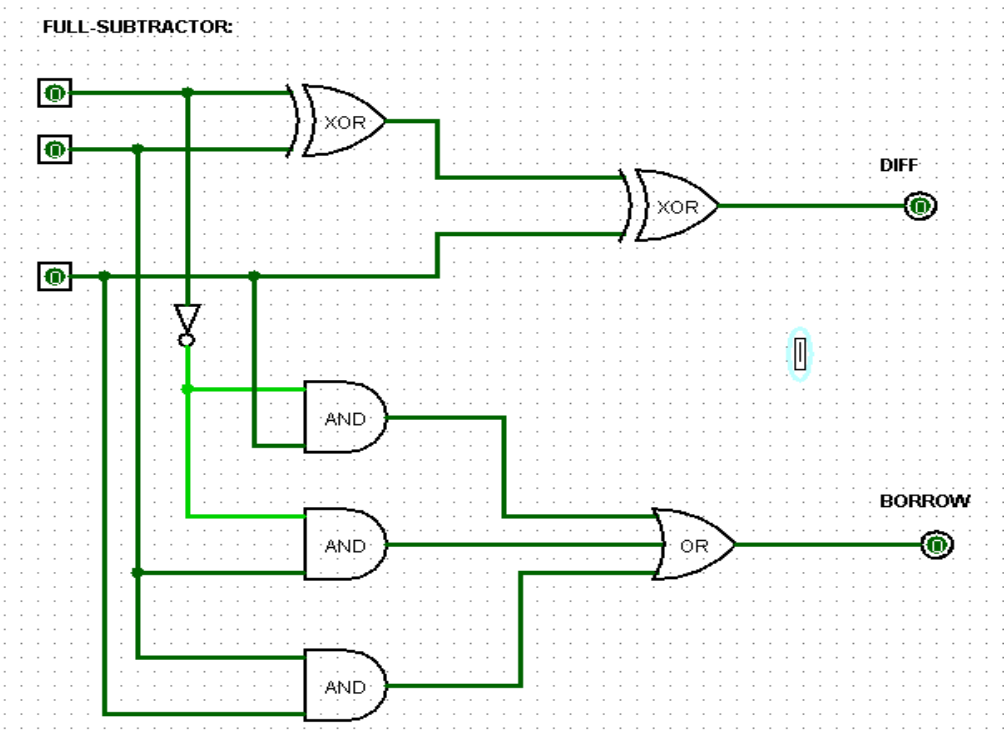

Observation:

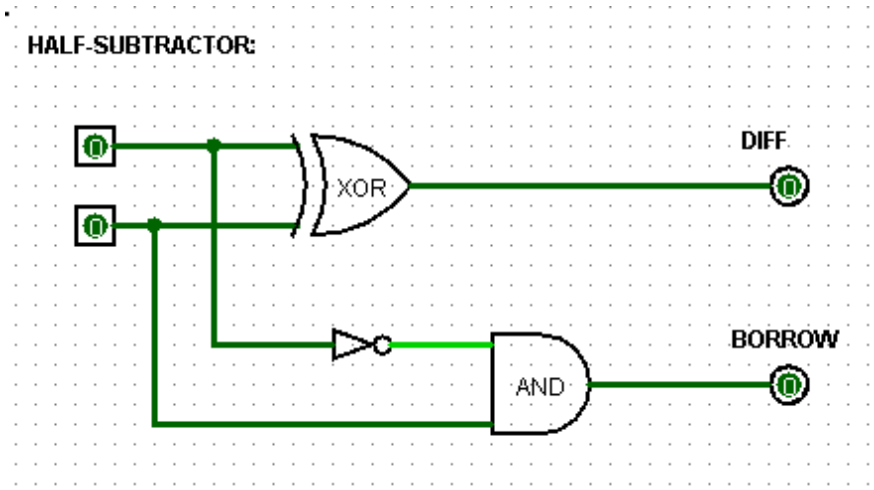

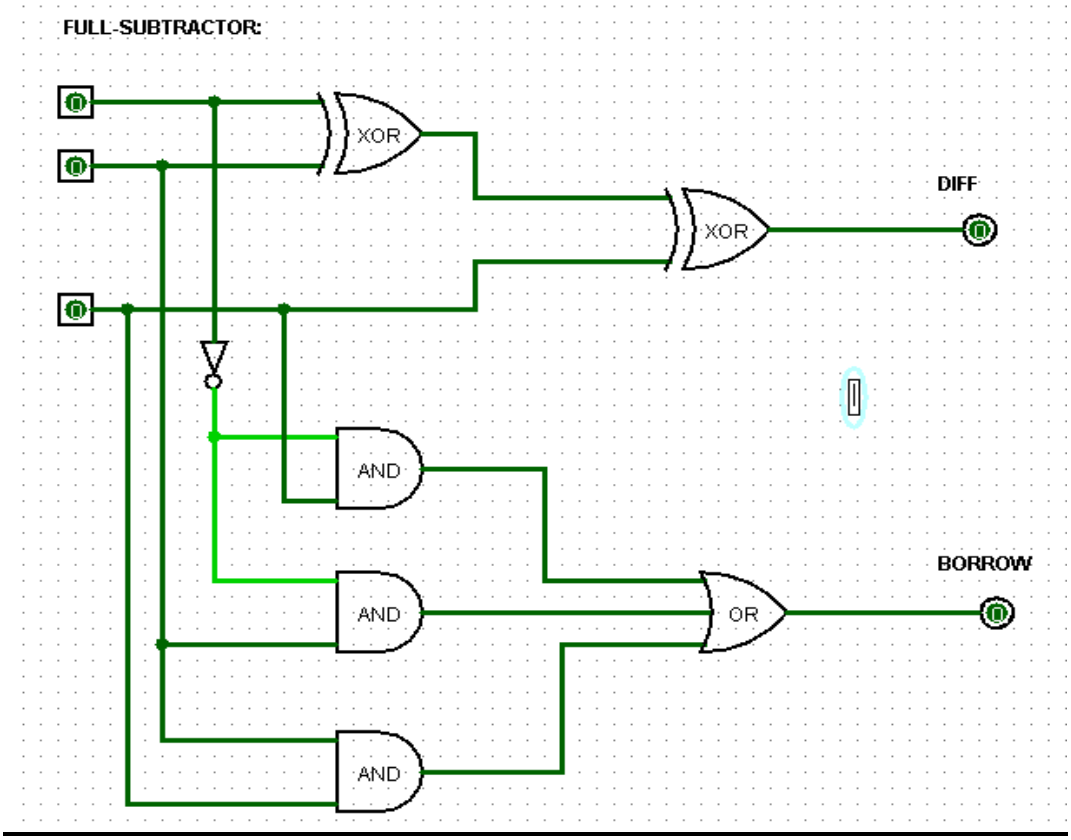

Result: Truth Table of logic gates are verified via Logisim

Half-Subtractor:

Inputs		Outputs	
A	B	Diff	Borrow
0	0	0	0
0	1	1	1
1	0	1	0
1	1	0	0

Full-Subtractor:

Inputs			Outputs	
A	B	$Borrow_{in}$	Diff	Borrow
0	0	0	0	0
0	0	1	1	1
0	1	0	1	1
0	1	1	0	1
1	0	0	1	0
1	0	1	0	0
1	1	0	0	0
1	1	1	1	1

Conclusion:

Circuit simulation and their Truth Table verification can be achieved using open source "**Logisim**" software.